elprom
industrial motors

Industrial Electric Motor

for Hazardous areas

Explosive Atmospheres

Increased Safety

Non Sparking

- Ex e - Ex nA - ATEX - IEC standard -

Equipments designed for potentially explosive atmospheres

ELECTRIC MOTOR FOR HAZARDOUS AREAS

CONTENTS

Title *pages*

1. PRODUCT QUALITY & CERTIFICATES 1

2. TOLERANCES & STANDARDS OF REFERENCE
2.1 Mechanical and Electrical tolerances
2.2 Standards of reference 2

3. GUIDE TO MOTOR CHOICE
Guide To Motor Choice 3
- GAS- Main inflammable substances
- DUST- Main inflammable substances 4
3.1 Ex motor marking
3.1.1 Motors For Zones 1 & 2 5

4. GENERAL INFORMATION
4.1 Range of Motors 5
4.2 Testing and certificates
4.3 Main features 6
4.4 Main Options
4.5 Motors identification 7

5. TERMINAL BOX, CABLE ENTRIES & CONNECTIONS
Position of Terminal Box, Cable Entries
5.1 Motors "Ex e" & "Ex nA"
5.2 Motors without terminal box complete of cable / Wiring Diagrams 8

6. MECHANICAL CHARACTERISTICS
6.1 Mounting Arrangements
6.2 Main Components
6.3 Bearings & Seals 9

7. ELECTRICAL DATA (ATEX Zone 1)
EWE SERIES MOTOR (3 Phase 1 speed)
II 2 G Ex e IIC T3 Gc / IEC Ex / ATEX
3000 (380-420V, 50Hz) 10
1500 (380-420V, 50Hz) 11
1000 (380-420V, 50Hz) 12
750 (380-420V, 50Hz) 13

pages

8. ELECTRICAL DATA (ATEX Zone 2)
EW SERIES MOTOR (3 Phase 1 speed)
II 3 G ExnA IIC T3 Gc / IEC Ex / ATEX
3000 (380-420V, 50Hz) 14
1500 (380-420V, 50Hz) 15
1000 (380-420V, 50Hz) 16
750 (380-420V, 50Hz) 17

9. OVERALL DIMENSIONS
9.1 Foot Mount B3 18
9.2 Flange Mount B5 19
9.3 Flange Mount B14 20

10. SPARE PARTS OVERHAULS & REPAIRS
10.1 Personnel qualification
10.2 Spare parts description 21

1. PRODUCT QUALITY & CERTIFICATES

International Protection Rating certified
by CONSORZIO EUROPEO CERTIFICAZIONE (ITALY)

CEC 14 ATEX 046X (Italy)
(Ex e)

CEC 13 ATEX 174 (Italy)
(Ex nA)

Product Standard:

2. TOLERANCES AND STANDARDS OF REFERENCE

ATEX

2.1 Mechanical & Electrical Tolerances

Symbol	Description	Tolerance	
A	Distance between centre-lines of fixing holes (end view)	± 1mm	
AB	Overall dimensions across the feet (end view)	± 2%	
AC	Diameter of the motor (without terminal box)	± 2%	
B	Distance between centre-lines of fixing holes (side view)	± 1mm	
C-CA	Distance from the shaft end shoulder to the centre-line of nearest mounting holes in the feet	± 3mm	
D-DA	Diameter of the shaft extension,	∅11 – 28 ∅32 – 48 ∅ ≥ 55	j6 k6 m6
E-EA	Length of the shaft extension from the shoulder	∅ < 55mm ∅ > 60mm	- 0,3mm + 0,5mm
F-FA	Width of the key way of the shaft extension	h9	
GA-GC	Distance from the top of the key to the opposite surface of the shaft extension	+0,2mm	
H	Distance between the centre-line of the shaft to the bottom of the feet	H ≤ 250 H ≥ 280	- 0,5mm - 1mm
HD	Distance from the top of the terminal box and to the bottom of the feet	+2%	
K	Diameter of the holes or width of the slots in the feet of the motor	+3%	
L	Overall length of the motor with a single shaft extension	+1%	
M	Pitch circle diameter of the fixing holes	±0,8mm	
N	Diameter of the spigot	∅ < 230 j6 ∅ ≥ 250 h6	
P	Outside diameter of the flange	±1mm	
R	Distance from the shaft shoulder to the mounting surface of the flange	±3mm	
S	Diameter of the fixing holes in the mounting flange or nominal diameter of thread	+3%	
	Distance from the shaft shoulder to the mounting surface of the flange with locked bearing	± 0,5mm	
	Mass of motor	-5 a + 10%	
Nominal voltage, V_N		± 5%	
Efficiency, η		-15% of (1-h)	
Power Factor, cosφ		-1/6 of (1-cosφ) min 0.02, max 0.07	
Slip (rpm) (full load & nominal ambient temperature), P_N		±20% if P_N ≥ 1kW ±30% if P_N< 1kW	
Locked rotor current, I_A		±20%	
Locked rotor torque, M_A		-15% +25%	
Breakdown torque, M_{max}		-10% con M_{max}/M_N ≥ 1.6	
Minimum torque, M_{min}		-15%	
Moment of Inertia, J		±10%	
Sound intensity level (sound pressure) L_{pfA}		+3 dBA	

2.2 Standards of reference

Title			EU CENELEC	International IEC
Rotating Electrical Machines	Part 1:	Rating & Performance	EN 60034-1	IEC 60034-1
	Part 2-1:	Standard methods for determining losses & efficiency from tests (excluding machines for traction vehicles)	EN 60034-2	IEC 60034-2
	Part 5:	Degrees of protection provided by the integral design of rotating electrical machines (IP code), Classification	EN 60034-5	IEC 60034-5
	Part 6:	Methods of cooling (IC code)	EN 60034-6	IEC 60034-6
	Part 7:	Classification of types of construction, mounting arrangements & terminal box position (IM code)	EN 60034-7	IEC 60034-7
	Part 9:	Noise limits	EN 60034-9	IEC 60034-9
	Part 12:	Starting performance of single-speed three-phase cage induction motors	EN 60034-12	IEC 60034-12
	Part 14:	Mechanical vibration of certain machines with shaft heights 56mm & higher - Measurement, evaluation & limits of vibration severity	EN 60034-14	IEC 60034-14
	General purpose three-phase induction motors having standard dimensions & output, Frame No, 56 to 315 & flange No, 65 to 740		EN 50347	IEC 60072-1
	Degree of protection provided by enclosures (IP code)		EN 60259	IEC 60529
Electrical apparatus for explosive gas atmospheres	Part 0:	General requirements	EN 60079-0	IEC 60079-0
	Part 15:	Type of protection "n"	EN 60079-15	IEC 60079-15
	Part 7:	Increased safety "e"	EN 60079-7	IEC 60079-7
Explosive atmospheres	Part 31:	Equipment dust ignition protection by enclosure "t"	EN 60079-31	IEC 60079-31

3 GUIDE TO MOTOR CHOICE

First step is the classification of hazardous places in zones.
The end user shall classify the hazardous areas under his own responsibility.
Directive 1999/92/EC provides information regarding "Classification of places where explosive atmosphere may occur". The corresponding standards of reference are EN 60079-10 for gas & EN 61241-10 for dust.

Here below are the synthetic step-by-step guide to choice of the motors. ***We will highlight all the characteristics of our motors.***

	ZONE CLASSIFICATION (presence of explosive atmosphere)		*(1) Group*	*(2) Category*	*(3) Type of protection*	*(4) Gas group*	*IP Degree*	*(5) GAS Temperature Class (6) DUST Surface Temperature*
GAS	0	Present continuously o for long period	II	1G	Electrical apparatus not allowed			
GAS	1	Occur in normal Operation occasionally	II	2G	**Ex e : "increased safety"**	IIA, IIB, IIC	IP55	T1 = 450°C T2 = 300°C T3 = 200°C T4 = 135°C T5 = 100°C T6 = 85°C
GAS	2	Rarely occur in normal operation & for short period	II	3G	**Ex nA : "non sparking"**	IIA, IIB, IIC	IP55	T1 = 450°C T2 = 300°C T3 = 200°C T4 = 135°C T5 = 100°C T6 = 85°C
POLVERI	20	Present continuously o for long period	II	1D	Electrical apparatus not allowed			
POLVERI	21	Occur in normal Operation occasionally	II	2D	**Ex tb : "protection by enclosure t"**	IIIC, IIIB, IIIA	IP6X	T 125°C
POLVERI	22	Rarely occur in normal operation & for short period	II	3D	**Ex tc : "protection by enclosure t"**	IIIB, IIIA	IP5X	

1.) Group II Comprises equipment intended for use in other places likely to become endangered by explosive atmosphere (surface plants different from mines).

2.) Group II is sub-divided in to 3 categories:

CATEGORY I	CATEGORY II	CATEGORY III
Very high level of protection	High level of protection	Normal level of protection

G Explosive atmosphere consisting of a mixture with air & flammable substances in the form of gas, vapour or mist

D Explosive atmosphere in the form of a cloud of combustible dust in air

3.) ELPROM Motors J – K series can have the following types of protection:

Ex e Increased safety (GAS)

Ex nA Non-sparking (GAS)

Ex tb, Ex tc Protection by enclosure (DUST)

4.) **GAS Group**
IIC - Hydrogen, Acetylene, Carbon Disulfide
IIB - Diethyl Ether, Ethylene etc..
IIA - Propane, Butane, Pentane, Natural Gas etc..

DUST Group
IIIC - Typical Gases: Hydrogen, Acetylene
IIIB - Typical Gases: Diethyl Ether, Ethylene
IIIA - Typical Gases: Propane, Butane

5.) (GAS) In function of their maximum surface temperature the motors are classified in a **TEMPERATURE CLASS**.

6.) (DUST) The **SURFACE TEMPERATURE** must be less or equal than the minimum value between Tmax1 e Tmax2 where:

Tmax1 = 2/3. Tcl with *Tcl* ignition temperature in °C of the dust cloud.

Tmas2= Tl-75°C with *Tl* ignition temperature in °C of a 5mm layer of dust.

Danger
Explosive material

GAS- Main inflammable substances

Inflammable substance	Group of GAS	Temperature of ignition	Temp. Class
2-Methylpentane	IIA	300	T2
Amyl acetate	IIA	360	T2
Butyl-n acetate	IIA	425	T2
Ethyl acetate	IIA	426	T2
Isobutyl acetate	IIA	420	T2
Methyl acetate	IIA	502	T1
Propil acetate	IIA	430	T2
Vinyl acetate	IIA	425	T2
Acetone	IIA	465	T1
Methanol	IIA	464	T1
Brome thane	IIA	511	T1
Butane	IIA	287	T3
Butane - 1	IIA	384	T2
Butane - 2	IIA	325	T2
Cycloexano	IIA	259	T3
Cycloexanol	IIA	300	T2
Cyclohexanone	IIA	419	T2
Cyclohexene	IIA	244	T3
Cyclopropane	IIA	498	T1
Cymene (p)	IIA	436	T2
Chloro-benzene	IIA	637	T1
Acetyl chloride	IIA	390	T2
Allyl chloride	IIA	390	T2
Chlorbutane	IIA	240	T3
Chloroethane	IIA	495	T1
Vinyl chloride	IIA	472	T1
Dichlorobenzene	IIA	648	T1
Dichloroethylene 1,1	IIA	570	T1
Dichloroethylene 1,2	IIA	441	T2
Diethylamine	IIA	312	T2
Dimethylamine	IIA	400	T2
Dimethylaniline	IIA	371	T2
Dimethylbutane 2,3	IIA	405	T2
Dimethylpentane 2,3	IIA	330	T2
Heptane	IIA	215	T3
Hexane	IIA	233	T3
Heptane	IIA	515	T1
Ethylacetoacetate	IIA	350	T2
Ethylamine	IIA	385	T2
Ethylmercaptane	IIA	295	T3
Butyl formate	IIA	320	T2

Inflammable substance	Group of GAS	Temperature of ignition	Temp. Class
Ethyl formate	IIA	440	T2
Methyl formate	IIA	450	T1
Natural gas	IIA	482	T1
Isobutane	IIA	460	T1
Isoheptane	IIA	220	T3
Isohexane	IIA	264	T3
Isooctane	IIA	410	T2
Isoprene	IIA	220	T3
Methane	IIA	537	T1
Methylcyclopentane	IIA	258	T3
Methylamine	IIA	430	T2
Methylmetacrylate	IIA	430	T2
Paraldehyde	IIA	239	T3
Pentane	IIA	258	T3
Pyridine	IIA	483	T1
Propane	IIA	470	T1
Propylamine	IIA	318	T2
Propylbenzene	IIA	450	T1
Propylene	IIA	455	T1
Styrene	IIA	490	T1
Toluene	IIA	480	T1
m-Xylene	IIA	522	T1
o-Xylene	IIA	464	T1
p-Xilene	IIA	528	T1
1,2 Butadiene	IIB	430	T2
1,3 Butadiene	IIB	430	T2
Dioxane	IIB	245	T3
Diethyl ether	IIB	160	T4
Ethyl vinyl ether	IIB	200	T3
Methyl vinyl ether	IIB	350	T2
Acrylate ethyl	IIB	350	T2
Ethylene	IIB	425	T2
LPG	IIB	365	T2
Sulphurated Hydrogen	IIB	260	T3
Methylacrylate	IIB	415	T2
Carbon monoxide	IIB	605	T1
Ethylene oxide	IIB	435	T2
Propylene oxide	IIB	430	T2
Acetylene	IIC	305	T2
Hydrogen	IIC	500	T1
Carbon disulfide	IIC	95	T6

DUST- Main inflammable substances

	Substance	Medium largeness particles (μm)	LEL (g/m3)	Cloud ignition Temp. Tcl (°C)	Layer 5mm thick ignition Temp. Tl (°C)
Metals, Alloys	Aluminium	10	60	560	430
	Bronze	18	750	390	260
	Iron	12	500	580	>450
	Graphite	7	30	600	680
	Lamp-black (carbon black)	13	15	620	435
	Sulphur	20	30	280	260
Wood, products of wood, fibres	Paper		100	620	370
	Cellulose (93% sweet wood, 6% hard wood)	14	15	420	335
	wood flour	60		470	305
	Wood (50% pear tree and 50% kernel)	35	100	500	340
	Wood (beech)	61		490	310
	Wood (pear tree)	27	100	500	320
	Sawdust of wood	65		470	290
	Cork	42	30	470	300
Agricultural products	Cacao	3	125	460-540	245
	Coffee	10	25	360	450
	Cereals (mixed powders)	37	125	510	300
	Wheat flour	56 - 125	60	480	>450
	Soy flour	20	200	620	280
	Gelatine	65	60	560	>450
	Wheat		100	470	220
	Dry milk	165	60	460	330
	Milk sugar	22	60 - 125	450	>450
	Rye			415-470	325
	Buttermilk	400		450	420
	Tobacco		60	485	290
	Black tea	76	125	510	300
	Sugar	32	30	360	>450
	Powdered sugar	17	60	350	>450

3.1 Ex Motor Making

Elprom Ex motors have been projected to be used for general purpose in presence of Ex atmosphere due both to a mixture of air & GAS and air & DUST.

3.1.1 Motors For Zones 1 & 2

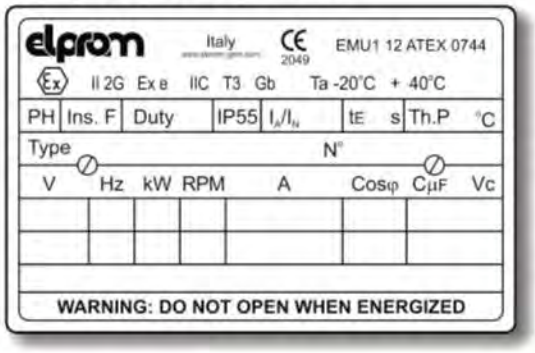

CE	Marking of conformity in compliance with the European Directives
2049	Number of Notified Body that gives the Product Quality Assurance Notification
Ex	Specific marking of explosion protection
II	Group (surface plants different from mines)
2	Category (high protection)
G	Explosive atmosphere for the presence of flammable gas, vapour or mist (GAS)
Ex e	Type of protection (GAS)
IIC	GAS Group
T3,T4	Temperature class of the motor (GAS)
Tamb	Ambient temperature range
EUM1 12 ATEX 0744	Type Certificate Number

4. GENERAL INFORMATIONS

4.1 Range of Motors

Ex Elprom motors are manufactured in compliance with all the European standards concerning equipment. It is a protective systems for potentially explosive atmosphere in compliance with the European Directive ATEX 94/9/CE (better known as ATEX).

Here below in the table showing the range of motors for each type of protection.

In the following pages there are testing and certificates, main features of these motors and options that is possible to have depending always on the type of protection.

Range of Motors

	Version	Type	Frame size	Pole N°	Output Range (kW)	Type of Protection	Temp. Class, Surface Temp.	ATEX Category	ATEX Zone
GAS	Increased safety	3-ph 1 speed	56-160	2	0,09 - 18,5	Ex e	T3 Ta -40°C +55°C	2G	1-2
			56-160	4	0,06 - 15				
			63-160	6	0,09 - 11				
			71-160	8	0,09 - 7,5				
		3-ph 2 speeds	71-160	4-2	0,22/0,33 - 12,5/18,5		T4 Ta -40°C +55°C		
			71-160	8-4	0,11/0,18 - 4,1/6,4				
		1-ph ② 1 speed	56-112	2	0,09 - 4				
			56-112	4	0,06 - 3				
	Non sparking	3-ph 1 speed	56-160	2	0,09 - 18,5	Ex nA	T3 Ta -20°C +40°C	3G	2-5
			56-160	4	0,06 - 15				
			63-160	6	0,09 - 11				
			71-160	8	0,09 - 7,5				
		3-ph 2 speeds	71-160	4-2	0,22/0,33 - 12,5/18,5		T4 Ta -20°C +40°C		
			71-160	8.4	0,11/0,18 - 4,1/6,4				
		1-ph ② 1 speed	56-112	2	0,09 - 4				
			56-112	4	0,06 - 3				

① These motors, if provided of Thermal Protection(normally PTC) inside the windings, can be driven by frequency converters.

② The capacitor of the single phase motors is put inside a special Ex d cylindrical enclosure fitted on the motor itself. Otherwise it must be placed in a safe area.

③ The motors are fitted with a special bigger terminal box IP65 where the capacitor can be placed. Otherwise it must be placed in a safe area.

4.2 Testing and certificates

Motors for hazardous areas have to be officially approved by a recognized test organization, authorized to issue test certificates, to ensure compliance with standards for this type of equipment.

Motors are defined and classified according to the categories and protection type which are defined in the corresponding standards.

Depending on the nature of the atmosphere, it is the responsibility of the user to determine which group and which maximum surface temperature should be specified for the motor installation.

The Ex motors built by Elprom are manufactured in compliance with all the European standards concerning equipments and protective systems for explosive atmosphere as requested by the European Directive 94/9/CE (better known as ATEX Directive).

The motors have been tested by a Notified Laboratory which released:

EC Type Certificate	*Product Quality assurance Notification*

It means that all the Ex motors are manufactured in compliance with the technical drawings and documents approved by the Notified Body after testing the motors (performing type test as written in the EN standards) and the production of such motors follows all the procedures requested by the Directive. Every year the Production of Ex motors is valuated by a Notified body to verify that all the procedures are constantly respected.

Each motor or batch of motors will be despatched together with the following documents:

- EC Declaration of Conformity
- Installation manual and safety instructions where are written all the indication regarding the installations of the motors and the important instructions regarding the type/s of protection of the motors.

As explained before Elprom produces different Ex motors that can be installed in different Ex areas.

4.3 Main features

ELPROM Ex electric motors are built and tested in comply with all the EN/IEC standards and also comply with the main European Directives. First of all the directive 94/9/EC (ATEX as already explained), 89/336/EC (EMC Electro Magnetic Compatibility), 98/37EC (Machinery Directive), 2002/95/EC (RoHS). All the motors are asynchronous with squirrel cage rotor, wound stator, closed and externally ventilated in comply with EN 60034-6 (IC 411).

Supply voltage
230/400 V ± 5% △/Y (56 - 112), 400/690 V ± 5% △/Y (132 - 160) and frequency 50 Hz ± 2% (EN 60034-1).

The power ratings
and the dimensions of the motors comply with EN 50347 and IEC 60072-1, the mounting arrangements B3, B5, B14 comply with EN 60034-7.
All the geometrical dimensions are unified following the tables UNEL 13113-71; 13117-71; 13118- 7; IEC60072-1.

The IP degrees of protection
of the motors comply with EN 60034-5. It depends on the type of protection as follow:

Ex e — IP55 (they have to be at least IP54 as requested by the standard EN 60079-7)

Ex nA — IP55 (they have to be at least IP54 as requested by the standard EN 60079-15)

Insulation class
All the motors have an insulation class F in compliance with EN 60034-1.

The bearings
Are high-quality single raw deep grooves ball bearings, pre-loaded by a wave spring.

Duty
The motors are normally built for S1 duty, otherwise S3 duty can be done on request after performing the heating tests.

Windings
Made of enamelled copper wires, insulated in two layers (insulation class H). They are painted with another layer of varnish and after this placed in an oven so to dry it.
The maximum ambient temperature is 40 °C.
It is also possible to tropicalize the windings using special additional varnish with high hygroscopic characteristics so to be used in places with an humidity >60% (see options)

Rotors
Die-cast aluminium squirrel cage or aluminium alloy (Al-Si Silumin).

The shafts
of the motors and the keys-shaft comply IEC 60072-1.
Special shaft are made on request. (see options)

Frame *(in compliance with IEC 60072-1)*
Die-cast aluminium with high mechanical strength, with a good thermal conductivity and light weight. The feet can be mounted on the motor frame in 3 different positions, in the bottom or on right & left side.

Terminal box
The terminal box of motor B3 is normally on the top of the motor. As the feet is removable, it is possible to have the terminal box on either side of the motor, too

Flanges & shields *(in compliance with IEC 60072-1)*
Die-cast aluminium, with dimensions as per standard IEC 60072-1, or with special shapes on request. (see options)

Ventilation *(in compliance with EN 60034-6)*
Self-ventilated motors IC 411. Depending on the type of protection the fan can be in plastic (Ex e, Ex nA) or in aluminium (Ex t).

Fan cover
Zinc-plated steel sheet.

Noise *(in compliance with EN 60034-9)*

4.4 Main Options

Axially locked shaft (IEC63 – IEC160)

Motors with a locked bearing on the font shield using an elastic metal ring. This solution is necessary in case of alternative axial stress (ie. Bevel gear pinion with alternative load or motion, frequent start-up under load or with high inertia) so to create axial movement of the shaft & bumps on the bearings.

Low temperatures motors (-40°C) (IEC56 – IEC160)

They have to be fitted with special bearing, metallic fan, metallic cable gland & plugs or made of special plastic materials.
In these cases, if there is a risk of condensation, it is better to fit the motors with "anti-condensation heaters" or drain holes.

Anti condensation Heaters (IEC80 – IEC160) (Option)

For motors installed in cold and wet places, with significant temperature ranges, moisture condensation can be dangerous for the resistance of the winding insulation. Upon request, you can apply appropriate heaters directly on the heads of winding. The terminals are connected to a terminal board inside the connection box of the motor.
The heaters are available at 110V and 220V , with a tolerance of +/- 10%

Condensation drain holes (Option)

These are motors with proper drain holes, for the discharge of condensed water that forms in specific climatic conditions. If necessary motors with these characteristics is appropriate to indicate not only the mounting type but also the position of the motor during the final use, in order to determine the proper location of the drain holes.
The motors are delivered with the holes sealed by a plug.

Tropicalization of windings

If the motors are installed outdoors or in high humidity areas, the windings may be tropicalized with a special varnish that has high hygroscopic characteristics in order to protect the insulation materials by the condensation. This protection avoid the reduction of the insulation properties of the windings.

Inverter duty motors

Only the motors Ex tD (both A21 and A22) can be driver by a converter. They must be fitted with thermal protections inside the windings.

Special voltages & frequencies

The standard three phase motors are produced at the following nominal voltages & frequencies:

230 / 400V , 50 Hz : up to 4 kW
400 / 690V , 50 Hz : more than 4 kW

The motors can run at a different nominal voltage with a tolerance of +/- 5%

On customer request, we can produce motors with special voltage & frequency.

Special shafts

On customer request, it is possible to supply motors with special shaft as customer drawing. Send a drawing to our Technical Department for a feasibility study.
It is possible to supply motors with shaft material different from the standard (C40), using Stainless Steel or others, with standard dimensions or special as customer drawing.

Special flanges

In some applications it is necessary to use special flanges on customer design to optimize the assembling or reduce the costs avoiding the use of adaptors.
Special request can be send to our Technical Department with drawings and material specifications. We will give a cost evaluation of the parts and the tools.

Mating tolerances under "accuracy" rating to

UNEL 13501-69 (DIN 42955) (special IM B5, IM B14, IM B5)
For application that need particularly small tolerances between shaft & shields due to particular couplings (ie.: gears-motors).

Rain fan cover

For outdoor applications, vertical mounting, DE shaft down (V5, V1, V18) it is suggested to assemble a special cowl with a rain cover. It is available for all the frame sizes.

Thermistors (PTC Positive Temperature Coefficient)

They must be used in case of Ex tb, Ex tc motors driven by inverters.
They are fitted inside the windings in number of 3 with a series connection to be connected to an appropriate tripping device that cut off the motors supply in case the winding reach the thermal probe limit temperature.
On request protectors will be available with different temperature setting in respect of the maximum Temperature class or surface temperature of the motor.

Thermal cut-off (bimetallic probes)

Motors with 1 or 2 thermal protectors with normally closed contact in series connection into the winding.
Nominal current 1,6 A, nominal voltage 250V c.a. The contact opens when the winding temperature reaches the setting temperature.
The series of contact shall be connected to an appropriate tripping device that cut off the motors supply in case the winding reach the thermal probe limit temperature.
On request protectors will be available with different temperature setting in respect of the maximum Temperature class or surface temperature of the motor.

Casing Material (against corrosion)

The Elprom motors have diecasted aluminium components & sandblasted. If it is not requested, the motors are supplied unpainted.

4.5 Motor Identification

EWE 71 S 4P

Poles
2, 4, 6, 8 poles

Model & Type of Motor
EWE : Ex e
EW : Ex nA

Frame Size
63, 71, 80, 90, 100, 112, 132, 160, 180, 200, 225, 280, 315, 355

Stator Dimension
S: Short Housing
M: Medium Housing
L: Long Housing

Supply Voltage
50 Hz 380V AC to 455V AC
60 Hz 440V AC to 460V AC

Temperature Class
T3 (200°C),
T4 (135°C),
T5 (100°C)

Ingress Protection
IP55

Thermal Protector
PTC Glass T4 (build in)
& other option available

5. TERMINAL BOX, CABLE ENTRIES & CONNECTIONS

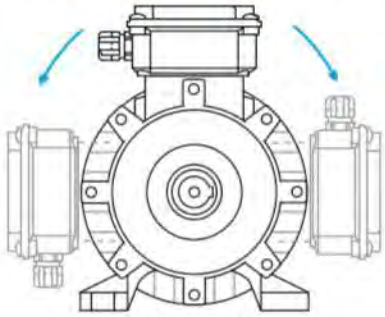

(Picture 1)

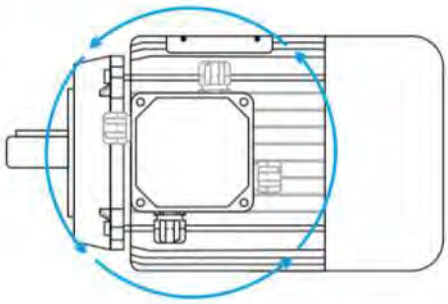

(Picture 2)

Position of Terminal Box & Cable Entries

Motor with removable feet, it is possible to fix them in 3 different positions so the terminal box is possible to be on the top or on the right & left sides of the motor *(see picture 1)*

At the same time the terminal box can be mounted on the motor so to have the cable entries where is necessary. It has four different entries position. *(see picture 2)*.

Motor Size	Cable Glands *1st*	*2nd*
63	M20	M16
71	M20	M16
80	M20	M20
90	M20	M20
100	M20	M20
112	M20	M20
132	M32	M32
160	M32	M32

5.1 Motors "Ex e" & "Ex nA"

The increased safety motors & no sparking motors are built with a special terminal board and the cable glands shall be certified in compliance with EN 60079-7 for the motor 'Ex e' & with EN 60079-15 for the motors 'Ex nA'.

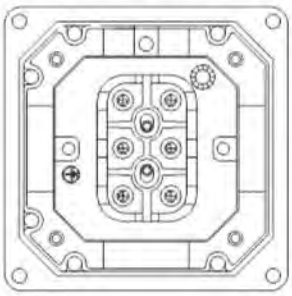

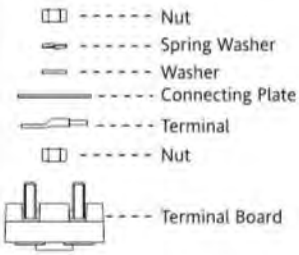

In the picture you can see the special terminal board (complying with EN 60079-7) used for these motors & the type of connection requested so to satisfy both the standards EN 60079-7 & EN 60079-15. In case of motor fitted with thermal protection heaters etc. the wires of these devices will be connected when possible to the auxiliary pins of a 8 pins terminal board.

If it is not possible, they must be connected to the cable welding the wires of the device to the cable wires & insulating them using a thermic sheath

Motors "Ex tb" & "Ex tc"

For these type of motors there is no need of a special terminal board & the cable glands shall be certified in compliance with EN 60079-31.

5.2 Motors without terminal box complete of cable

To reduce the total height of the motor, it is possible to have the motor without terminal box and complete of supply cable. The cable outlet can be on the top or on the sides.

Wiring Diagrams (Shaft Side View)

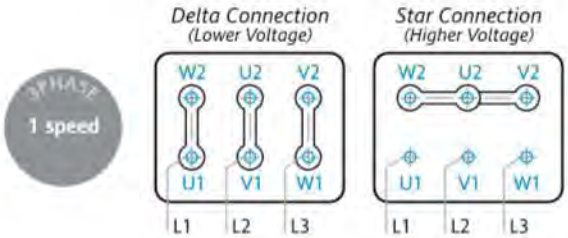

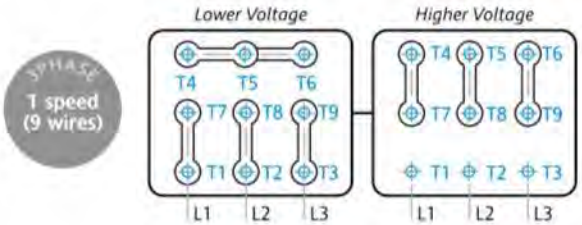

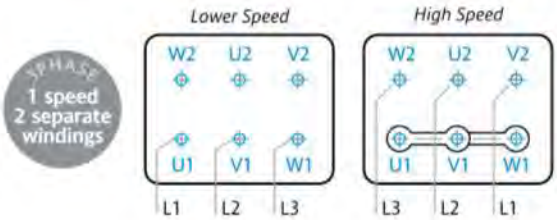

6. MECHANICAL CHARACTERISTICS

6.1 Mounting Arrangements

Foot Mounted

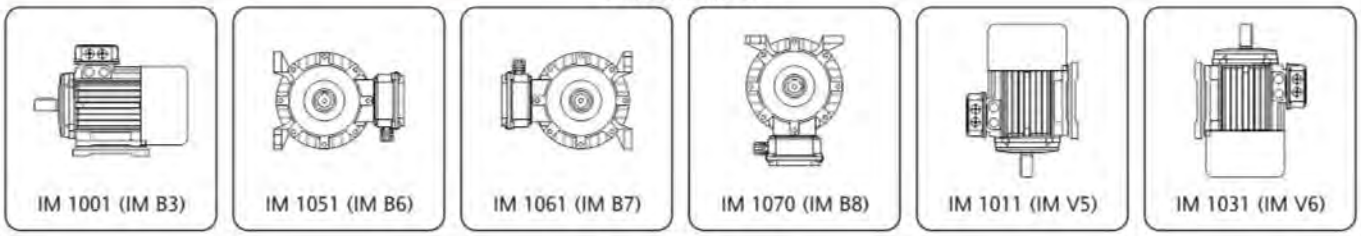

Flange Mounted

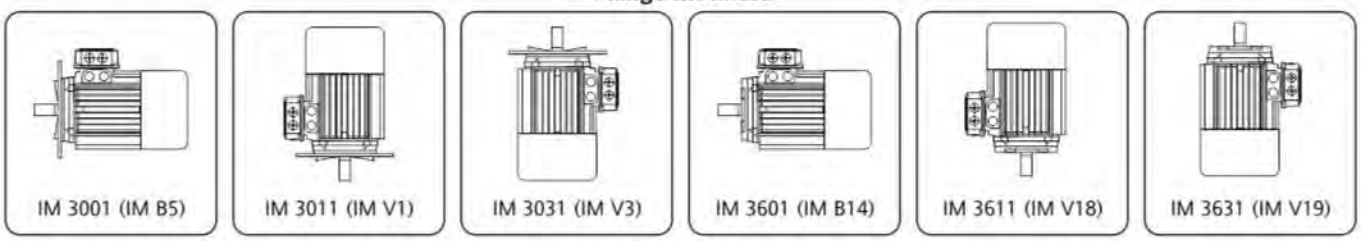

Foot-flange Mounted

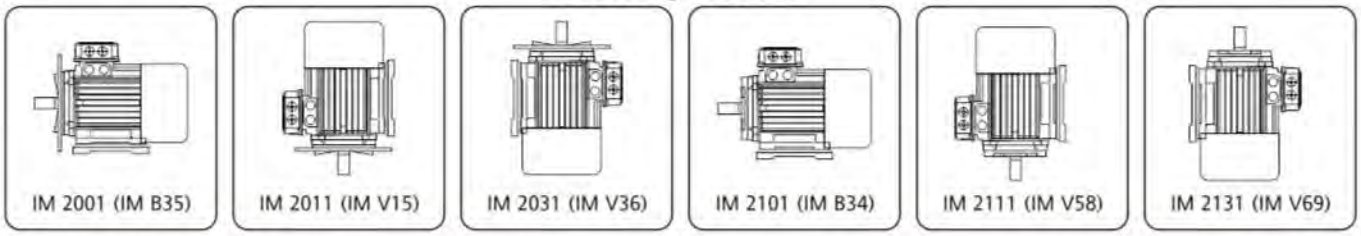

6.2 Main Components

Component	*Material*	*Note*
Frame	Aluminium (71~132) / Cast Iron (160 ~ 355)	Removable feet (Aluminium)
End-Shields	Aluminium	
Flange B5	Aluminium	
Flange B14	Aluminium	
Terminal box	Aluminium	
Shaft	Steel C40	
Rotor	Magnetic Lamination die-cast Aluminium	
Stator	Magnetic Lamination	
Windings	Enamelled Copper Wires (2 layers)	
V-Ring	NBR Rubber	Special Material: VITON
Bearings	Deep Groove Ball Bearings	See below
Fan	Plastic (Ex e, Ex nA), Aluminium or Antistatic Plastic (Ex tb, Ex tc)	

6.3 Bearings & Seals

Motor Type	*Frame Size*	*Poles*	*Drive End Bearing*	*Non-Drive End Bearing*
IE1/E2/IE3-63	63	2P ~ 8P	6201 2RZC3	6201 2RZC3
IE1/E2/IE3-71	71	2P ~ 8P	6202 2RZC3	6202 2RZC3
IE1/E2/IE3-80	80	2P ~ 8P	6204 2RZC3	6204 2RZC3
IE1/E2/IE3-90	90	2P ~ 8P	6205 2RZC3	6205 2RZC3
IE1/E2/IE3-100	100	2P ~ 8P	6206 2RZC3	6206 2RZC3
IE1/E2/IE3-112	112	2P ~ 8P	6206 2RZC3	6206 2RZC3
IE1/E2/IE3-132	132	2P ~ 8P	6308 2RZC3	6308 2RZC3
IE1/E2/IE3-160	160	2P ~ 8P	6309 C3	6309 C3
IE1/E2/IE3-180	180	2P ~ 8P	6311 C3	6311 C3

Motor Type	*Frame Size*	*Poles*	*Drive End Bearing*	*Non-Drive End Bearing*
IE1/E2/IE3-200	200	2P ~ 8P	6312 C3	6312 C3
IE1/E2/IE3-225	225	2P ~ 8P	6313 C3	6313 C3
IE1/E2/IE3-250	250	2P ~ 8P	6314 C3	6314 C3
IE1/E2/IE3-280	280	2P	6314 C3	6314 C3
IE1/E2/IE3-280	280	4P ~ 8P	6317 C3	6317 C3
IE1/E2/IE3-315	315	2P	6317 C3	6317 C3
IE1/E2/IE3-315	315	4P ~ 8P	6319 C3	6319 C3
IE1/E2/IE3-355	355	2P	6319 C3	6319 C3
IE1/E2/IE3-355	355	4P ~ 8P	6322 C3	6322 C3

The motors are normally fitted with permanently greased bearings of type 2Z, lubricated with a special grease G-15 & have a service max temperature of 150°C.

The bearing life time for aluminium motors is approximately (depending on application & load conditions):
- 2 & 2/4 pole motors, 10,000 - 20,000 duty hours
- 4 to 8 pole motors, 20,000 - 40,000 duty hours

Both on drive end & non-drive end are mounted V-ring seals in order to have the IP66 protection.

IP Protection

Motors Ex e: IP55 *(should be at least IP54 in compliance with EN 60079-7)*
Motors Ex nA: IP55 *(should be at least IP54 in compliance with EN 60079-15)*
Motors Ex tc: IP55 *(should at least IP5X in compliance with EN 60079-31-non conductive dust)*
Motors Ex tb: IP65 *(should at least IP6X in compliance with EN 60079-31-conductive dust)*

7. ELECTRICAL DATA FOR EWE SERIES MOTOR

ATEX

Motor for ATEX Zone 1 Execution: II 2 G Ex e IIC T3 Gc / IEC Ex / ATEX

3000 3 PHASE MOTOR 1 SPEED (380~420V, 50Hz)

Type	Output [kW]	Full load / Current A			Speed [rpm]	EFF [η]	Power [COSφ]	Rated Toque [Nm]	Locked Toque	Locked Current	Max. Toque	Noise Lv. [dB (A)]	Weight [kg]
		380V	400V	415V									
EWE-63M1-2	0.18	0.53	0.50	0.48	2720	65.0%	0.68	0.6	2.2	5.5	2.2	61	7
EWE-63M2-2	0.25	0.69	0.66	0.62	2720	68.0%	0.81	0.9	2.2	5.5	2.2	61	8
EWE-71M1-2	0.37	0.99	0.94	0.90	2740	70.0%	0.81	1.3	2.2	6.1	2.2	64	10
EWE-71M2-2	0.55	1.4	1.33	1.27	2740	73.0%	0.82	1.9	2.2	6.1	2.3	64	11
EWE-80M1-2	0.75	1.83	1.74	1.66	2825	75.0%	0.83	2.5	2.2	6.1	2.3	67	15
EWE-80M2-2	1.1	2.61	2.48	2.36	2825	77.0%	0.84	3.7	2.2	7.0	2.3	67	16
EWE-90S-2	1.5	3.46	3.29	3.13	2840	79.0%	0.84	5.0	2.2	7.0	2.3	72	19
EWE-90L-2	2.2	4.85	4.61	4.39	2840	81.0%	0.85	7.4	2.2	7.0	2.3	72	22
EWE-100L-2	3	6.34	6.02	5.74	2870	83.0%	0.87	10.0	2.2	7.5	2.3	76	32
EWE-112M-2	4	8.20	7.79	7.42	2880	85.0%	0.88	13.3	2.2	7.5	2.3	77	39
EWE-132S1-2	5.5	11.1	10.5	10.0	2900	86.0%	0.88	18.1	2.2	7.5	2.3	80	58
EWE-132S2-2	7.5	14.9	14.2	13.5	2900	87.0%	0.88	24.7	2.2	7.5	2.3	80	66
EWE-160M1-2	11	21.2	20.1	19.2	2930	88.4%	0.89	35.9	2.2	7.5	2.3	86	104
EWE-160M2-2	15	28.6	27.2	25.9	2930	89.4%	0.89	48.9	2.2	7.5	2.3	86	112
EWE-160L-2	18.5	34.7	33.0	31.4	2930	90.0%	0.90	60.3	2.2	7.5	2.3	86	132
EWE-180M-2	22	41.0	39.0	37.1	2940	90.5%	0.90	71.5	2.0	7.5	2.3	89	162
EWE-200L1-2	30	55.4	52.6	50.1	2950	91.4%	0.90	97.1	2.0	7.5	2.3	92	225
EWE-200L2-2	37	67.9	64.5	61.4	2950	92.0%	0.90	119.8	2.0	7.5	2.3	92	245
EWE-225M-2	45	82.1	78.0	74.3	2960	92.5%	0.90	145.2	2.0	7.5	2.3	92	290
EWE-250M-2	55	99.8	94.8	90.3	2965	93.0%	0.90	177.2	2.0	7.5	2.3	93	267
EWE-280S-2	75	135.3	128.5	122.4	2970	93.6%	0.90	241.2	2.0	7.5	2.3	94	495
EWE-280M-2	90	160.0	152.0	144.8	2970	93.9%	0.91	289.4	2.0	7.5	2.3	94	540
EWE-315S-2	110	195.4	185.6	176.8	2975	94.0%	0.91	353.1	1.8	7.1	2.2	96	880
EWE-315M-2	132	233.2	221.5	211.0	2975	94.5%	0.91	423.7	1.8	7.1	2.2	96	1000
EWE-315L1-2	160	279.3	265.3	252.7	2975	94.6%	0.92	513.6	1.8	7.1	2.2	99	1080
EWE-315L2-2	200	348.4	331.0	315.2	2975	94.8%	0.92	642.0	1.8	7.1	2.2	99	1130
EWE-355M-2	250	433.7	412.0	392.4	2980	95.3%	0.92	801.2	1.8	7.1	2.2	103	1560
EWE-355L-2	315	545.3	518.0	493.4	2980	95.6%	0.92	1009.5	1.8	7.1	2.2	103	1740

* Bimetal Thermal Protector 120°C ±5°C
* IMPORTANT: Ex e motors, even if equipped with a thermal protection, can't be used for inverter duty.

7. ELECTRICAL DATA FOR EWE SERIES MOTOR

ATEX

Motor for ATEX Zone 1 Execution: II 2 G Ex e IIC T3 Gc / IEC Ex / ATEX

1500 3 PHASE MOTOR 1 SPEED (380–420V, 50Hz)

Type	Output [kW]	Full load / Current A			Speed [rpm]	EFF [η]	Power [COSφ]	Rated Toque [Nm]	Locked Toque	Locked Current	Max. Toque	Noise Lv. [dB (A)]	Weight [kg]
		360V	400V	420V									
EWE-63M1-4	0.12	0.44	0.42	0.40	1310	57.0%	0.72	0.9	2..1	4.4	2.2	52	7.5
EWE-63M2-4	0.18	0.62	0.59	0.56	1310	60.0%	0.73	1.3	2.1	4.4	2.2	52	8.5
EWE-71M1-4	0.25	0.79	0.75	0.71	1330	65.0%	0.74	7.8	2.1	5.2	2.2	55	10.5
EWE-71M2-4	0.37	1.12	1.06	1.01	1330	67.0%	0.75	2.7	2.1	5.2	2.2	55	11.5
EWE-80M1-4	0.55	1.57	1.49	1.42	1390	71.0%	0.75	3.8	2.4	5.2	2.3	58	15
EWE-80M2-4	0.75	2.06	1.95	1.85	1390	73.0%	0.76	5.2	2.3	6.0	2.3	58	16
EWE-90S-4	1.1	2.85	2.71	2.58	1400	76.2%	1.77	7.6	2.3	6.0	2.3	61	20
EWE-90L-4	1.5	3.68	3.50	3.33	140	78.5%	1.79	10.3	2.3	6.0	2.3	61	23
EWE-100L1-4	2.2	5.09	4.84	4.61	1420	81.0%	0.81	14.9	2.3	7.0	2.3	54	31
EWE-100L2-4	3	6.73	6.39	6.09	1420	82.6%	0.82	20.3	2.3	7.0	2.3	54	35
EWE-112M-4	4	8.80	8.36	7.96	1440	84.2%	0.82	26.5	2.3	7.0	2.3	65	41
EWE-132S-4	5.5	11.7	11.1	10.6	1440	85.7%	0.83	36.5	2.3	7.0	2.3	71	60
EWE-132M-4	7.5	15.8	14.8	14.1	1440	87.0%	0.84	49.7	2.3	7.0	2.3	71	74
EWE-160M-4	11	22.5	21.4	20.4	1460	88.4%	0.84	72.0	2.2	7.0	2.3	75	108
EWE-160L-4	15	30.0	28.5	27.1	1460	89.4%	0.85	98.1	2.2	7.5	2.3	75	128
EWE-180M-4	18.5	36.3	34.5	32.8	1465	90.5%	0.86	120.2	2.2	7.5	2.3	76	158
EWE-180L-4	22	42.9	40.8	38.8	1465	91.0%	0.86	142.9	2.2	7.5	2.3	76	172
EWE-200L-4	30	58.0	55.1	52.5	1470	92.0%	0.86	194.9	2.2	7.2	2.3	79	241
EWE-225S-4	37	70.2	66.7	63.5	1475	92.5%	0.87	239.6	2.2	7.2	2.3	81	280
EWE-225M-4	45	85.0	80.8	76.9	1475	92.8%	0.87	291.4	2.2	7.2	2.3	81	305
EWE-250M-4	55	103.3	98.1	93.5	1475	93.0%	0.87	354.9	2.2	7.2	2.3	83	375
EWE-280S-4	75	139.3	132.3	126.0	1480	93.8%	0.87	484.0	2.2	7.2	2.3	86	507
EWE-280M-4	90	167.4	159.0	151.5	1480	94.2%	0.87	580.7	2.2	7.2	2.3	86	572
EWE-315S-4	110	201.0	191.0	181.9	1480	94.5%	0.88	709.8	2.1	6.9	2.2	93	930
EWE-315M-4	132	240.4	228.4	217.5	1480	94.8%	0.88	851.8	2.1	6.9	2.2	93	1050
EWE-315L1-4	160	287.8	273.4	260.4	1480	94.9%	0.89	1032.4	2.1	6.9	2.2	97	1110
EWE-315L2-4	200	359.8	341.8	325.5	1480	95.0%	0.89	1290.5	2.1	6.9	2.2	97	1180
EWE-355M-4	250	443.3	421.1	401.1	1490	95.3%	0.90	1602.3	2.1	6.9	2.2	101	1580
EWE-355L-4	315	558.6	530.7	505.4	1490	95.6%	0.90	2019.0	2.1	6.9	2.2	101	1750

* Bimetal Thermal Protector 120°C ±5°C

* IMPORTANT: Ex e motors, even if equipped with a thermal protection, can't be used for inverter duty.

7. ELECTRICAL DATA FOR EWE SERIES MOTOR

ATEX

Motor for ATEX Zone 1 Execution: II 2 G Ex e IIC T3 Gc / IEC Ex / ATEX

1000 3 PHASE MOTOR 1 SPEED (380~420V, 50Hz)

Type	Output [kW]	Full load / Current A			Speed [rpm]	EFF [η]	Power [COSφ]	Rated Toque [Nm]	Locked Toque	Locked Current	Max. Toque	Noise Lv. [dB (A)]	Weight [kg]
		380V	400V	420V									
EWE-71M1-6	0.18	0.74	0.70	0.67	850	56.0%	0.66	2.0	21.9	4.0	2.0	52	10
EWE-71M2-6	0.25	0.95	0.90	0.86	850	59.0%	0.68	2.8	1.9	4.0	2.0	52	11
EWE-80M1-6	0.37	1.30	1.24	1.18	900	62.0%	0.70	4.0	1.9	4.7	2.0	54	15
EWE-80M2-6	0.55	1.79	1.70	1.62	900	65.0%	0.72	5.9	1.9	4.7	2.1	54	16
EWE-90S-6	0.75	2.29	2.18	2.07	910	69.0%	0.72	7.9	2.0	5.5	2.1	57	20
EWE-90L-6	1.1	3.18	3.02	2.88	910	72.0%	0.73	11.5	2.0	5.5	2.1	57	23
EWE-100L-6	1.5	4.00	3.80	3.62	930	76.0%	0.75	15.6	2.0	5.5	2.1	61	30
EWE-112M-6	2.2	5.57	5.29	5.04	940	79.0%	0.76	22.5	2.0	6.5	2.1	65	39
EWE-132S-6	3	7.40	7.03	6.70	960	81.0%	0.76	29.8	2.1	6.5	2.1	69	55
EWE-132M1-6	4	9.75	9.26	8.82	960	82.0%	0.76	39.8	2.1	6.5	2.1	69	68
EWE-132M2-6	5.5	12.9	12.3	11.7	960	84.0%	0.77	54.4	2.1	6.5	2.1	69	73
EWE-160M-6	7.5	17.2	16.3	15.6	970	86.0%	0.77	73.8	2.0	6.5	2.1	73	104
EWE-160L-6	11	24.5	23.3	22.2	970	87.5%	0.78	108.3	2.0	6.5	2.1	73	126
EWE-180L-6	15	31.6	30.0	28.6	970	89.0%	0.81	147.7	2.0	7.0	2.1	73	168
EWE-200L1-6	18.5	38.6	36.7	34.9	975	90.0%	0.81	180.3	2.1	7.0	2.1	76	215
EWE-200L2-6	22	44.7	42.5	40.4	975	90.0%	0.83	214.4	2.1	7.0	2.1	76	238
EWE-225M-6	30	59.3	56.3	53.7	980	91.5%	0.84	292.3	2.0	7.0	2.1	76	280
EWE-250M-6	37	71.1	67.6	64.3	980	92.0%	0.86	360.6	2.1	7.0	2.1	78	350
EWE-280S-6	45	85.9	81.6	77.7	980	92.5%	0.86	438.5	2.1	7.0	2.0	80	463
EWE-280M-6	55	104.7	99.5	94.7	980	92.8%	0.86	536.0	2.1	7.0	2.0	80	508
EWE-315S-6	75	141.7	134.6	128.2	985	93.5%	0.86	727.2	2.0	7.0	2.0	85	860
EWE-315M-6	90	169.5	161.0	153.4	985	93.8%	0.86	872.6	2.0	7.0	2.0	85	980
EWE-315L1-6	110	206.7	196.4	187.0	985	94.0%	0.86	1066.5	2.0	6.7	2.0	85	1060
EWE-315L2-6	132	244.7	232.5	221.4	985	94.2%	0.87	1279.8	2.0	6.7	2.0	85	1135
EWE-355M1-6	160	292.3	277.7	264.5	990	94.5%	0.88	1543.4	1.9	6.7	2.0	92	1480
EWE-355M2-6	200	365.4	347.1	330.6	990	94.7%	0.88	1929.3	1.9	6.7	2.0	92	1640
EWE-355L-6	250	456.8	434.0	413.3	990	94.9%	0.88	2411.6	1.9	6.7	2.0	92	1810

* Bimetal Thermal Protector 120°C ±5°C

* IMPORTANT: Ex e motors, even if equipped with a thermal protection, can't be used for inverter duty.

7. ELECTRICAL DATA FOR EWE SERIES MOTOR

ATEX

Motor for ATEX Zone 1 Execution: II 2 G Ex e IIC T3 Gc / IEC Ex / ATEX

750 3 PHASE MOTOR 1 SPEED (380–420V, 50Hz)

Type	Output [kW]	Full load / Current A			Speed [rpm]	EFF [η]	Power [COSφ]	Rated Toque [Nm]	Locked Toque	Locked Current	Max. Toque	Noise Lv. [dB (A)]	Weight [kg]
		380V	400V	420V									
EWE-80M1-8	0.18	0.88	0.84	0.80	650	51.0%	0.61	2.7	1.8	3.3	1.9	52	15
EWE-80M2-8	0.25	1.15	1.09	1.04	650	54.0%	0.61	3.7	1.8	3.3	1.9	52	16
EWE-90S-9	0.37	1.49	1.42	1.35	660	62.0%	0.61	5.3	1.8	4.0	1.9	56	20
EWE-90L-9	0.55	2.17	2.06	1.96	660	63.0%	0.61	7.8	1.8	4.0	2.0	56	24
EWE-100L1-8	0.75	2.40	2.28	2.17	690	71.0%	0.67	10.5	1.8	4.0	2.0	59	28
EWE-100L2-8	1.1	3.32	3.15	3.00	690	73.0%	0.69	15.4	1.8	5.0	2.0	59	30
EWE-112M-8	1.5	4.40	4.18	3.98	700	75.0%	0.69	20.8	1.8	5.0	2.0	61	38
EWE-132S-8	2.2	6.04	5.74	5.46	710	78.0%	0.71	29.8	1.8	6.0	2.0	64	54
EWE-132M-8	3	7.90	7.51	7.15	710	79.0%	0.73	40.6	1.8	6.0	2.0	64	63
EWE-160M1-8	4	10.3	9.79	9.32	720	81.0%	0.73	63.1	1.9	6.0	2.0	68	91
EWE-160M2-8	5.5	13.6	12.9	12.3	720	83.0%	0.74	73.0	2.0	6.0	2.0	68	103
EWE-160L-8	7.5	17.8	16.9	16.1	720	85.5%	0.75	99.5	2.0	6.0	2.0	68	128
EWE-180L-8	11	25.1	23.9	22.7	730	87.5%	0.76	143.9	2.0	6.6	2.0	70	165
EWE-200L-8	15	34.1	32.4	30.9	730	88.0%	0.76	196.2	2.0	6.6	2.0	73	224
EWE-225S-8	18.5	41.1	39.1	37.2	730	90.0%	0.76	242.0	1.9	6.6	2.0	73	255
EWE-225M-8	22	47.7	45.0	42.9	730	90.5%	0.78	287.8	1.9	6.6	2.0	73	292
EWE-250M-8	30	63.4	60.2	57.4	735	91.0%	0.79	389.8	1.9	6.6	2.0	75	368
EWE-280S-8	37	77.8	73.9	70.4	735	91.5%	0.79	480.7	1.9	6.6	2.0	76	475
EWE-280M-8	45	94.1	89.4	85.1	735	92.0%	0.79	584.7	1.9	6.6	2.0	76	527
EWE-315S-8	55	111.2	105.6	100.6	735	92.8%	0.81	714.6	1.8	6.6	2.0	82	840
EWE-315M-8	75	151.3	143.7	136.9	735	93.0%	0.81	974.5	1.8	6.6	2.0	82	1020
EWE-315L1-8	90	177.8	168.9	160.9	740	93.8%	0.82	1169.4	1.8	6.6	2.0	82	1100
EWE-315L2-8	110	216.8	206.0	196.2	740	84.0%	0.82	1428.3	1.8	6.4	2.0	82	1180
EWE-355M1-8	132	261.0	248.0	236.1	740	93.7%	0.82	1703.5	1.8	6.4	2.0	90	1610
EWE-355M2-8	160	314.7	299.0	28437	740	94.2%	0.82	2064.9	1.8	6.4	2.0	90	1700
EWE-355L-8	200	387.4	368.0	350.5	740	94.5%	0.83	2581.1	1.8	6.4	2.0	90	1850

* Bimetal Thermal Protector 120°C ±5°C

* IMPORTANT: Ex e motors, even if equipped with a thermal protection, can't be used for inverter duty.

8. ELECTRICAL DATA FOR EW SERIES MOTOR

ATEX

Motor for ATEX Zone 2 Execution: II 3 G Ex nA IIC T3 Gc / IEC Ex / ATEX

3000 3 PHASE MOTOR 1 SPEED (380~420V, 50Hz)

Type	Output [kW]	Full load / Current A			Speed [rpm]	EFF [η]	Power [COSφ]	Rated Toque [Nm]	Locked Toque	Locked Current	Max. Toque	Noise Lv. [dB (A)]	Weight [kg]
		380V	400V	415V									
EW-63M1-2	0.18	0.53	0.50	0.48	2720	65.0%	0.68	0.6	2.2	5.5	2.2	61	7
EW-63M2-2	0.25	0.69	0.66	0.62	2720	68.0%	0.81	0.9	2.2	5.5	2.2	61	8
EW-71M1-2	0.37	0.99	0.94	0.90	2740	70.0%	0.81	1.3	2.2	6.1	2.2	64	10
EW-71M2-2	0.55	1.4	1.33	1.27	2740	73.0%	0.82	1.9	2.2	6.1	2.3	64	11
EW-80M1-2	0.75	1.83	1.74	1.66	2825	75.0%	0.83	2.5	2.2	6.1	2.3	67	15
EW-80M2-2	1.1	2.61	2.48	2.36	2825	77.0%	0.84	3.7	2.2	7.0	2.3	67	16
EW-90S-2	1.5	3.46	3.29	3.13	2840	79.0%	0.84	5.0	2.2	7.0	2.3	72	19
EW-90L-2	2.2	4.85	4.61	4.39	2840	81.0%	0.85	7.4	2.2	7.0	2.3	72	22
EW-100L-2	3	6.34	6.02	5.74	2870	83.0%	0.87	10.0	2.2	7.5	2.3	76	32
EW-112M-2	4	8.20	7.79	7.42	2880	85.0%	0.88	13.3	2.2	7.5	2.3	77	39
EW-132S1-2	5.5	11.1	10.5	10.0	2900	86.0%	0.88	18.1	2.2	7.5	2.3	80	58
EW-132S2-2	7.5	14.9	14.2	13.5	2900	87.0%	0.88	24.7	2.2	7.5	2.3	80	66
EW-160M1-2	11	21.2	20.1	19.2	2930	88.4%	0.89	35.9	2.2	7.5	2.3	86	104
EW-160M2-2	15	28.6	27.2	25.9	2930	89.4%	0.89	48.9	2.2	7.5	2.3	86	112
EW-160L-2	18.5	34.7	33.0	31.4	2930	90.0%	0.90	60.3	2.2	7.5	2.3	86	132
EW-180M-2	22	41.0	39.0	37.1	2940	90.5%	0.90	71.5	2.0	7.5	2.3	89	162
EW-200L1-2	30	55.4	52.6	50.1	2950	91.4%	0.90	97.1	2.0	7.5	2.3	92	225
EW-200L2-2	37	67.9	64.5	61.4	2950	92.0%	0.90	119.8	2.0	7.5	2.3	92	245
EW-225M-2	45	82.1	78.0	74.3	2960	92.5%	0.90	145.2	2.0	7.5	2.3	92	290
EW-250M-2	55	99.8	94.8	90.3	2965	93.0%	0.90	177.2	2.0	7.5	2.3	93	267
EW-280S-2	75	135.3	128.5	122.4	2970	93.6%	0.90	241.2	2.0	7.5	2.3	94	495
EW-280M-2	90	160.0	152.0	144.8	2970	93.9%	0.91	289.4	2.0	7.5	2.3	94	540
EW-315S-2	110	195.4	185.6	176.8	2975	94.0%	0.91	353.1	1.8	7.1	2.2	96	880
EW-315M-2	132	233.2	221.5	211.0	2975	94.5%	0.91	423.7	1.8	7.1	2.2	96	1000
EW-315L1-2	160	279.3	265.3	252.7	2975	94.6%	0.92	513.6	1.8	7.1	2.2	99	1080
EW-315L2-2	200	348.4	331.0	315.2	2975	94.8%	0.92	642.0	1.8	7.1	2.2	99	1130
EW-355M-2	250	433.7	412.0	392.4	2980	95.3%	0.92	801.2	1.8	7.1	2.2	103	1560
EW-355L-2	315	545.3	518.0	493.4	2980	95.6%	0.92	1009.5	1.8	7.1	2.2	103	1740

* Bimetal Thermal Protector 120°C ±5°C

* IMPORTANT: Ex e motors, even if equipped with a thermal protection, can't be used for inverter duty.

8. ELECTRICAL DATA FOR EW SERIES MOTOR

ATEX

Motor for ATEX Zone 2 Execution: II 3 G Ex nA IIC T3 Gc / IEC Ex / ATEX

1500 3 PHASE MOTOR 1 SPEED (380–420V, 50Hz)

Type	Output [kW]	Full load / Current A			Speed [rpm]	EFF [η]	Power [COSφ]	Rated Toque [Nm]	Locked Toque	Locked Current	Max. Toque	Noise Lv. [dB (A)]	Weight [kg]
		360V	400V	420V									
EW-63M1-4	0.12	0.44	0.42	0.40	1310	57.0%	0.72	0.9	2..1	4.4	2.2	52	7.5
EW-63M2-4	0.18	0.62	0.59	0.56	1310	60.0%	0.73	1.3	2.1	4.4	2.2	52	8.5
EW-71M1-4	0.25	0.79	0.75	0.71	1330	65.0%	0.74	7.8	2.1	5.2	2.2	55	10.5
EW-71M2-4	0.37	1.12	1.06	1.01	1330	67.0%	0.75	2.7	2.1	5.2	2.2	55	11.5
EW-80M1-4	0.55	1.57	1.49	1.42	1390	71.0%	0.75	3.8	2.4	5.2	2.3	58	15
EW-80M2-4	0.75	2.06	1.95	1.85	1390	73.0%	0.76	5.2	2.3	6.0	2.3	58	16
EW-90S-4	1.1	2.85	2.71	2.58	1400	76.2%	1.77	7.6	2.3	6.0	2.3	61	20
EW-90L-4	1.5	3.68	3.50	3.33	140	78.5%	1.79	10.3	2.3	6.0	2.3	61	23
EW-100L1-4	2.2	5.09	4.84	4.61	1420	81.0%	0.81	14.9	2.3	7.0	2.3	54	31
EW-100L2-4	3	6.73	6.39	6.09	1420	82.6%	0.82	20.3	2.3	7.0	2.3	54	35
EW-112M-4	4	8.80	8.36	7.96	1440	84.2%	0.82	26.5	2.3	7.0	2.3	65	41
EW-132S-4	5.5	11.7	11.1	10.6	1440	85.7%	0.83	36.5	2.3	7.0	2.3	71	60
EW-132M-4	7.5	15.8	14.8	14.1	1440	87.0%	0.84	49.7	2.3	7.0	2.3	71	74
EW-160M-4	11	22.5	21.4	20.4	1460	88.4%	0.84	72.0	2.2	7.0	2.3	75	108
EW-160L-4	15	30.0	28.5	27.1	1460	89.4%	0.85	98.1	2.2	7.5	2.3	75	128
EW-180M-4	18.5	36.3	34.5	32.8	1465	90.5%	0.86	120.2	2.2	7.5	2.3	76	158
EW-180L-4	22	42.9	40.8	38.8	1465	91.0%	0.86	142.9	2.2	7.5	2.3	76	172
EW-200L-4	30	58.0	55.1	52.5	1470	92.0%	0.86	194.9	2.2	7.2	2.3	79	241
EW-225S-4	37	70.2	66.7	63.5	1475	92.5%	0.87	239.6	2.2	7.2	2.3	81	280
EW-225M-4	45	85.0	80.8	76.9	1475	92.8%	0.87	291.4	2.2	7.2	2.3	81	305
EW-250M-4	55	103.3	98.1	93.5	1475	93.0%	0.87	354.9	2.2	7.2	2.3	83	375
EW-280S-4	75	139.3	132.3	126.0	1480	93.8%	0.87	484.0	2.2	7.2	2.3	86	507
EW-280M-4	90	167.4	159.0	151.5	1480	94.2%	0.87	580.7	2.2	7.2	2.3	86	572
EW-315S-4	110	201.0	191.0	181.9	1480	94.5%	0.88	709.8	2.1	6.9	2.2	93	930
EW-315M-4	132	240.4	228.4	217.5	1480	94.8%	0.88	851.8	2.1	6.9	2.2	93	1050
EW-315L1-4	160	287.8	273.4	260.4	1480	94.9%	0.89	1032.4	2.1	6.9	2.2	97	1110
EW-315L2-4	200	359.8	341.8	325.5	1480	95.0%	0.89	1290.5	2.1	6.9	2.2	97	1180
EW-355M-4	250	443.3	421.1	401.1	1490	95.3%	0.90	1602.3	2.1	6.9	2.2	101	1580
EW-355L-4	315	558.6	530.7	505.4	1490	95.6%	0.90	2019.0	2.1	6.9	2.2	101	1750

* Bimetal Thermal Protector 120°C ±5°C

* IMPORTANT: Ex e motors, even if equipped with a thermal protection, can't be used for inverter duty.

8. ELECTRICAL DATA FOR EW SERIES MOTOR

ATEX

Motor for ATEX Zone 2 Execution: II 3 G Ex nA IIC T3 Gc / IEC Ex / ATEX

1000 3 PHASE MOTOR 1 SPEED (380–420V, 50Hz)

Type	Output [kW]	Full load / Current A			Speed [rpm]	EFF [η]	Power [COSφ]	Rated Toque [Nm]	Locked Toque	Locked Current	Max. Toque	Noise Lv. [dB (A)]	Weight [kg]
		380V	400V	420V									
EW-71M1-6	0.18	0.74	0.70	0.67	850	56.0%	0.66	2.0	21.9	4.0	2.0	52	10
EW-71M2-6	0.25	0.95	0.90	0.86	850	59.0%	0.68	2.8	1.9	4.0	2.0	52	11
EW-80M1-6	0.37	1.30	1.24	1.18	900	62.0%	0.70	4.0	1.9	4.7	2.0	54	15
EW-80M2-6	0.55	1.79	1.70	1.62	900	65.0%	0.72	5.9	1.9	4.7	2.1	54	16
EW-90S-6	0.75	2.29	2.18	2.07	910	69.0%	0.72	7.9	2.0	5.5	2.1	57	20
EW-90L-6	1.1	3.18	3.02	2.88	910	72.0%	0.73	11.5	2.0	5.5	2.1	57	23
EW-100L-6	1.5	4.00	3.80	3.62	930	76.0%	0.75	15.6	2.0	5.5	2.1	61	30
EW-112M-6	2.2	5.57	5.29	5.04	940	79.0%	0.76	22.5	2.0	6.5	2.1	65	39
EW-132S-6	3	7.40	7.03	6.70	960	81.0%	0.76	29.8	2.1	6.5	2.1	69	55
EW-132M1-6	4	9.75	9.26	8.82	960	82.0%	0.76	39.8	2.1	6.5	2.1	69	68
EW-132M2-6	5.5	12.9	12.3	11.7	960	84.0%	0.77	54.4	2.1	6.5	2.1	69	73
EW-160M-6	7.5	17.2	16.3	15.6	970	86.0%	0.77	73.8	2.0	6.5	2.1	73	104
EW-160L-6	11	24.5	23.3	22.2	970	87.5%	0.78	108.3	2.0	6.5	2.1	73	126
EW-180L-6	15	31.6	30.0	28.6	970	89.0%	0.81	147.7	2.0	7.0	2.1	73	168
EW-200L1-6	18.5	38.6	36.7	34.9	975	90.0%	0.81	180.3	2.1	7.0	2.1	76	215
EW-200L2-6	22	44.7	42.5	40.4	975	90.0%	0.83	214.4	2.1	7.0	2.1	76	238
EW-225M-6	30	59.3	56.3	53.7	980	91.5%	0.84	292.3	2.0	7.0	2.1	76	280
EW-250M-6	37	71.1	67.6	64.3	980	92.0%	0.86	360.6	2.1	7.0	2.1	78	350
EW-280S-6	45	85.9	81.6	77.7	980	92.5%	0.86	438.5	2.1	7.0	2.0	80	463
EW-280M-6	55	104.7	99.5	94.7	980	92.8%	0.86	536.0	2.1	7.0	2.0	80	508
EW-315S-6	75	141.7	134.6	128.2	985	93.5%	0.86	727.2	2.0	7.0	2.0	85	860
EW-315M-6	90	169.5	161.0	153.4	985	93.8%	0.86	872.6	2.0	7.0	2.0	85	980
EW-315L1-6	110	206.7	196.4	187.0	985	94.0%	0.86	1066.5	2.0	6.7	2.0	85	1060
EW-315L2-6	132	244.7	232.5	221.4	985	94.2%	0.87	1279.8	2.0	6.7	2.0	85	1135
EW-355M1-6	160	292.3	277.7	264.5	990	94.5%	0.88	1543.4	1.9	6.7	2.0	92	1480
EW-355M2-6	200	365.4	347.1	330.6	990	94.7%	0.88	1929.3	1.9	6.7	2.0	92	1640
EW-355L-6	250	456.8	434.0	413.3	990	94.9%	0.88	2411.6	1.9	6.7	2.0	92	1810

* Bimetal Thermal Protector 120°C ±5°C

* IMPORTANT: Ex e motors, even if equipped with a thermal protection, can't be used for inverter duty.

8. ELECTRICAL DATA FOR EW SERIES MOTOR

ATEX

Motor for ATEX Zone 2 Execution: II 3 G Ex nA IIC T3 Gc / IEC Ex / ATEX

750 3 PHASE MOTOR 1 SPEED (380–420V, 50Hz)

Type	Output [kW]	Full load / Current A			Speed [rpm]	EFF [η]	Power [COSφ]	Rated Toque [Nm]	Locked Toque	Locked Current	Max. Toque	Noise Lv. [dB (A)]	Weight [kg]
		380V	400V	420V									
EW-80M1-8	0.18	0.88	0.84	0.80	650	51.0%	0.61	2.7	1.8	3.3	1.9	52	15
EW-80M2-8	0.25	1.15	1.09	1.04	650	54.0%	0.61	3.7	1.8	3.3	1.9	52	16
EW-90S-9	0.37	1.49	1.42	1.35	660	62.0%	0.61	5.3	1.8	4.0	1.9	56	20
EW-90L-9	0.55	2.17	2.06	1.96	660	63.0%	0.61	7.8	1.8	4.0	2.0	56	24
EW-100L1-8	0.75	2.40	2.28	2.17	690	71.0%	0.67	10.5	1.8	4.0	2.0	59	28
EW-100L2-8	1.1	3.32	3.15	3.00	690	73.0%	0.69	15.4	1.8	5.0	2.0	59	30
EW-112M-8	1.5	4.40	4.18	3.98	700	75.0%	0.69	20.8	1.8	5.0	2.0	61	38
EW-132S-8	2.2	6.04	5.74	5.46	710	78.0%	0.71	29.8	1.8	6.0	2.0	64	54
EW-132M-8	3	7.90	7.51	7.15	710	79.0%	0.73	40.6	1.8	6.0	2.0	64	63
EW-160M1-8	4	10.3	9.79	9.32	720	81.0%	0.73	63.1	1.9	6.0	2.0	68	91
EW-160M2-8	5.5	13.6	12.9	12.3	720	83.0%	0.74	73.0	2.0	6.0	2.0	68	103
EW-160L-8	7.5	17.8	16.9	16.1	720	85.5%	0.75	99.5	2.0	6.0	2.0	68	128
EW-180L-8	11	25.1	23.9	22.7	730	87.5%	0.76	143.9	2.0	6.6	2.0	70	165
EW-200L-8	15	34.1	32.4	30.9	730	88.0%	0.76	196.2	2.0	6.6	2.0	73	224
EW-225S-8	18.5	41.1	39.1	37.2	730	90.0%	0.76	242.0	1.9	6.6	2.0	73	255
EW-225M-8	22	47.7	45.0	42.9	730	90.5%	0.78	287.8	1.9	6.6	2.0	73	292
EW-250M-8	30	63.4	60.2	57.4	735	91.0%	0.79	389.8	1.9	6.6	2.0	75	368
EW-280S-8	37	77.8	73.9	70.4	735	91.5%	0.79	480.7	1.9	6.6	2.0	76	475
EW-280M-8	45	94.1	89.4	85.1	735	92.0%	0.79	584.7	1.9	6.6	2.0	76	527
EW-315S-8	55	111.2	105.6	100.6	735	92.8%	0.81	714.6	1.8	6.6	2.0	82	840
EW-315M-8	75	151.3	143.7	136.9	735	93.0%	0.81	974.5	1.8	6.6	2.0	82	1020
EW-315L1-8	90	177.8	168.9	160.9	740	93.8%	0.82	1169.4	1.8	6.6	2.0	82	1100
EW-315L2-8	110	216.8	206.0	196.2	740	84.0%	0.82	1428.3	1.8	6.4	2.0	82	1180
EW-355M1-8	132	261.0	248.0	236.1	740	93.7%	0.82	1703.5	1.8	6.4	2.0	90	1610
EW-355M2-8	160	314.7	299.0	28437	740	94.2%	0.82	2064.9	1.8	6.4	2.0	90	1700
EW-355L-8	200	387.4	368.0	350.5	740	94.5%	0.83	2581.1	1.8	6.4	2.0	90	1850

* Bimetal Thermal Protector 120°C ±5°C

* IMPORTANT: Ex e motors, even if equipped with a thermal protection, can't be used for inverter duty.

9. OVERALL DIMENSIONS

9.1 Foot Mount B3

B3

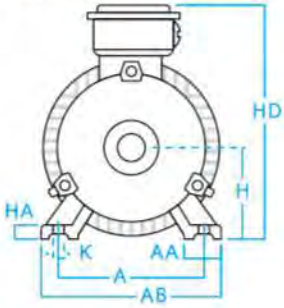

80~132

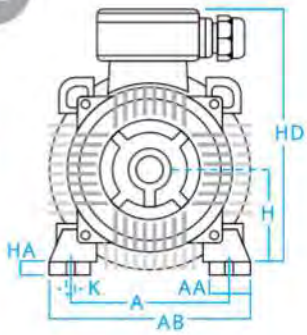

160~280

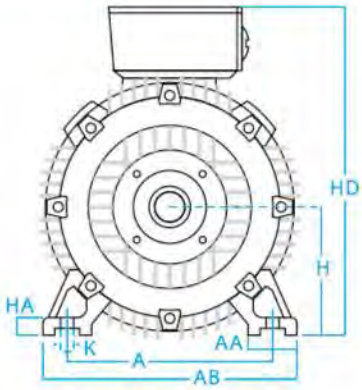

315~355

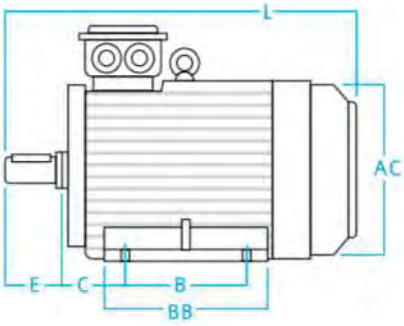

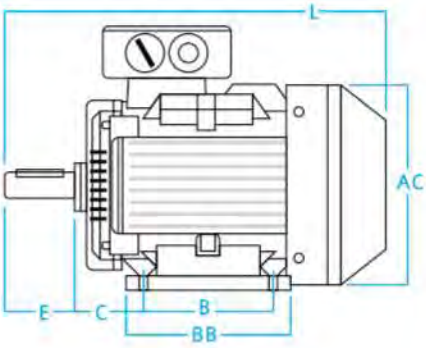

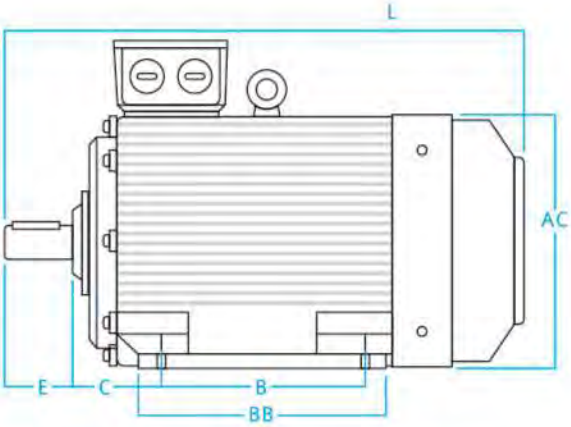

Frame Size	A	AA	AB	AC	B	BB	C	D	E	F	G	H	HA	HD	K	L
63	100	-	135	130	80	-	40	11	23	4	8.5	663	-	180	7	230
71	112	-	150	145	90	-	45	14	30	5	11	71	-	195	7	255
80	125	34	165	175	100	130	50	19	40	6	15.5	80	10	220	10	295
90S	140	36	180	195	100	135	56	24	50	8	20	90	12.5	250	10	320
90 L	140	36	180	195	125	160	56	24	60	8	20	90	12.5	250	10	345
100L	160	40	205	215	140	182	63	28	60	8	24	100	14	270	12	385
112M	190	45	230	240	140	195	70	28	80	8	24	112	14	300	12	400
132S	216	52	270	275	140	205	89	38	80	10	33	132	16	345	12	470
132M	216	52	270	275	178	245	89	38	110	10	33	132	16	345	12	510
160M	254	65	315	330	210	260	108	42	110	12	37	160	19	400	15	605
160L	254	65	315	330	254	305	108	42	110	12	37	160	19	400	15	660
180M	279	74	355	380	241	297	121	48	110	14	42.5	180	22	440	15	690
180L	279	74	355	380	279	327	121	48	110	14	42.5	180	22	440	15	725
200L	318	75	395	420	305	370	133	55	140	16	49	200	25	500	19	765
225S(4-8P)	356	75	436	465	286	355	149	60	110	18	53	225	28	555	19	810
225M	356	75	436	465	311	380	149	55	140	16	49	225	28	550	19	805
225M(4-8P)	356	75	436	465	311	380	149	60	140	18	53	225	28	550	19	835
250M(2P)	406	88	495	520	349	440	168	60	140	18	53	250	33	615	24	910
250M(4-8P)	406	88	495	520	349	440	168	65	140	18	58	250	33	615	24	910
280S(2P)	457	103	550	570	368	495	190	65	140	18	58	280	35	660	24	980
280S(4-8P)	457	103	550	570	368	495	190	75	140	20	67.5	280	35	660	24	980
280M(2P)	457	103	550	570	419	535	190	65	140	18	58	280	35	660	24	1030
280M(4-8P)	457	103	550	570	419	535	190	75	140	20	67.5	280	35	660	24	1030
315S(2P)	508	120	630	650	406	515	216	65	140	18	58	315	45	825	28	1180
315S(4-8P)	508	120	630	650	406	515	216	80	170	22	71	315	45	825	28	1275
315M(2P)	508	120	630	650	457	625	216	65	140	18	58	315	45	830	28	1290
315M(4-8P)	508	120	630	650	457	625	216	80	170	22	71	315	45	830	28	1320
315L(2P)	508	120	630	650	508	625	216	65	140	18	58	315	45	830	28	1290
315L(4-8P)	508	120	630	650	508	625	216	80	170	22	71	315	45	830	28	1320
355M(2P)	610	125	735	735	560	755	245	75	140	20	67.5	355	49	1010	28	1510
355M(4-8P)	610	125	735	735	560	755	245	95	170	25	86	355	49	1010	28	1540
355L(2P)	610	125	735	735	630	755	245	75	140	20	67.5	355	49	1010	28	1510
355L(4-8P)	610	125	735	735	630	755	245	95	170	25	86	355	49	1010	28	1540

9. OVERALL DIMENSIONS

9.2 Flange Mount B5

B5

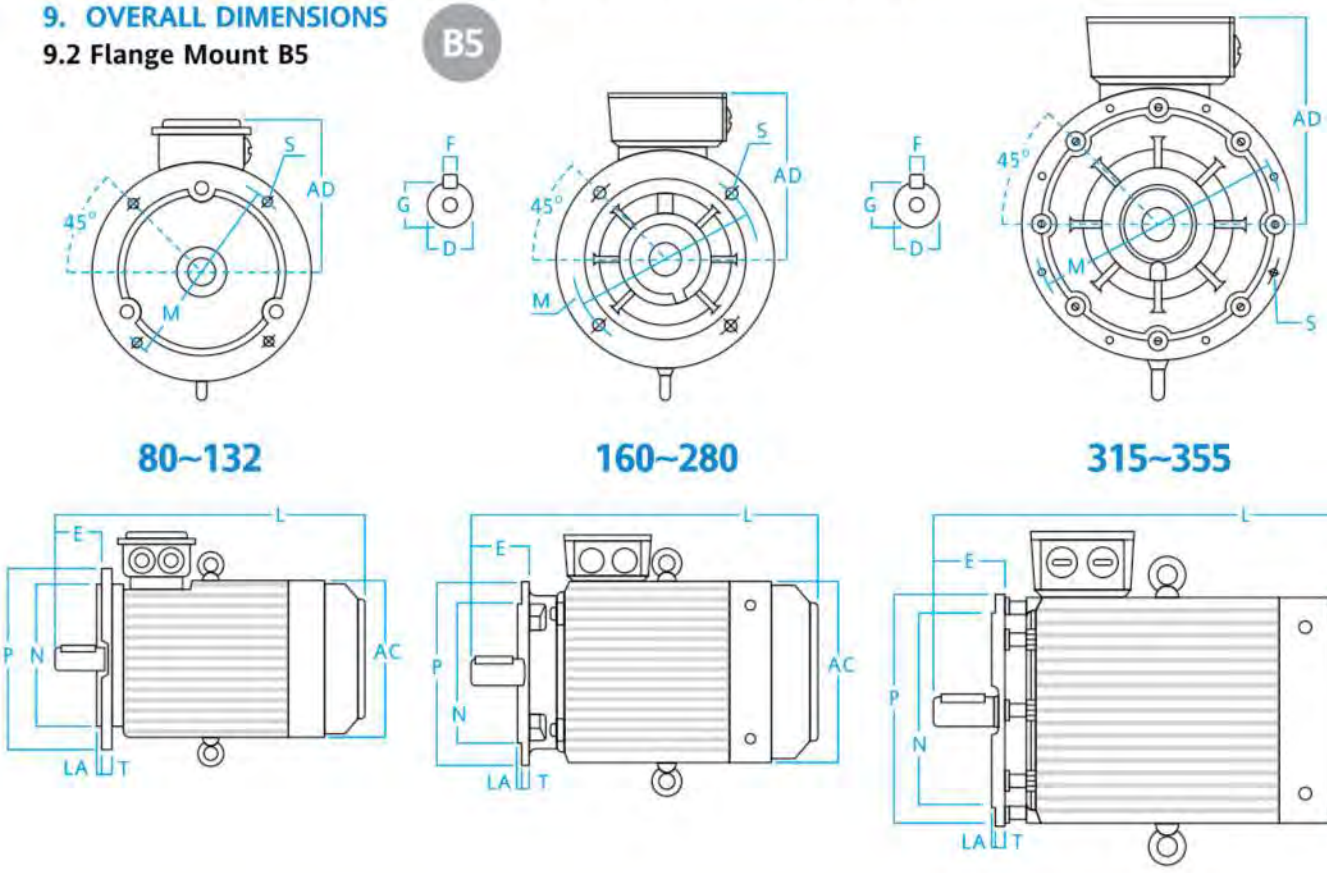

Frame Size	A	AD	D	E	F	G	L	LA	M	N	P	S	T
63	130	70	11	23	4	8.5	230	-	115	95	140	10	3
71	145	80	14	30	5	11	255	-	130	110	160	10	3
80	175	145	19	40	6	15.5	295	12	165	130	200	12	3.5
90S	195	155	24	50	8	20	320	12	165	130	200	12	3.5
90 L	195	155	24	50	8	20	345	12	165	130	200	12	3.5
100L	215	180	28	60	8	24	385	14	215	180	250	15	4
112M	240	190	28	60	8	24	400	14	215	180	250	15	4
132S	275	210	38	80	10	33	470	14	265	230	300	15	4
132M	275	210	38	80	10	33	510	14	265	230	300	15	4
160M	330	255	42	110	12	37	605	15	300	250	350	19	5
160L	330	255	42	110	12	37	660	15	300	250	350	19	5
180M	380	280	48	110	14	42.5	690	15	300	250	350	19	5
180L	380	280	48	110	14	42.5	725	15	300	250	350	19	5
200L	420	305	55	110	16	49	765	17	350	300	400	19	5
225S(4-8P)	465	335	60	140	18	53	810	20	400	350	450	19	5
225M	465	335	55	110	16	49	805	20	400	350	450	19	5
225M(4-8P)	465	335	60	140	18	53	835	20	400	350	450	19	5
250M(2P)	520	370	60	140	18	53	910	20	500	450	550	19	5
250M(4-8P)	520	370	65	140	18	58	910	20	500	450	550	19	5
280S(2P)	570	410	65	140	18	58	980	22	500	450	550	19	5
280S(4-8P)	570	410	75	140	20	6735	980	22	500	450	550	19	5
280M(2P)	570	410	65	140	18	58	1030	22	500	450	550	19	5
280M(4-8P)	570	410	75	140	20	67.5	1030	22	500	450	550	19	5
315S(2P)	650	630	65	140	18	58	1180	24	600	550	660	24	6
315S(4-8P)	650	630	80	170	22	71	1275	24	600	550	660	24	6
315M(2P)	650	630	65	140	18	58	1290	24	600	550	660	24	6
315M(4-8P)	650	630	80	170	22	71	1320	24	600	550	660	24	6
315L(2P)	650	630	65	140	18	58	1290	24	600	550	660	24	6
315L(4-8P)	650	630	80	170	22	71	1320	24	600	550	660	24	6
355M(2P)	735	655	75	140	20	67.5	1510	25	740	680	800	24	6
355M(4-8P)	735	655	95	170	25	86	1540	25	740	680	800	24	6
355L(2P)	735	655	75	140	20	67.5	1510	25	740	680	800	24	6
355L(4-8P)	735	655	95	170	25	86	1540	25	740	680	800	24	6

9. OVERALL DIMENSIONS

9.3 Flange Mount B14

B14

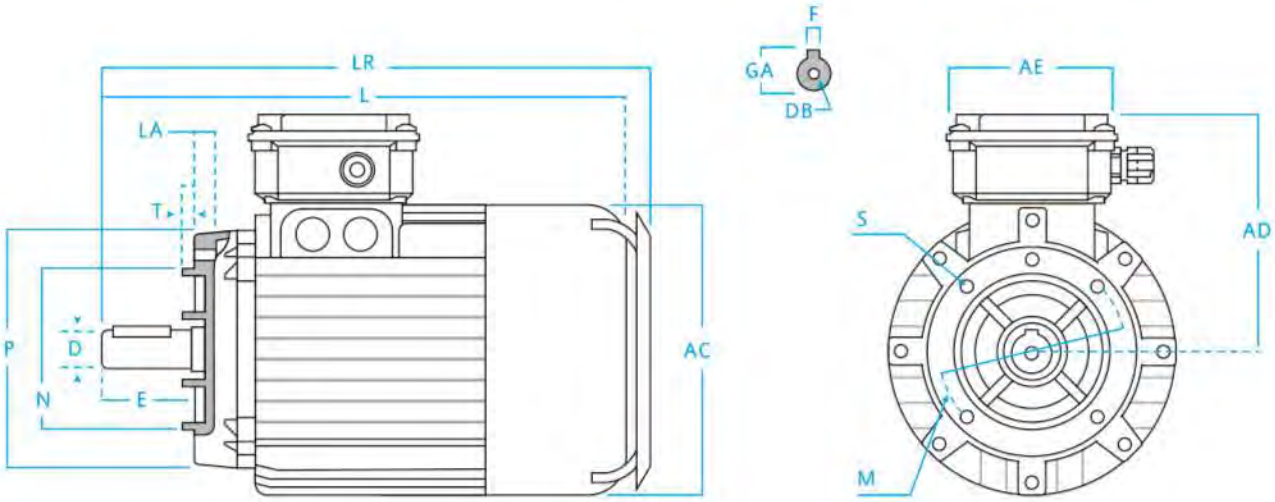

56~160

Frame Size	AC	AD	AE	D	DB	E	F	GA	L	LA	LR	M	N	P	S	T
56	109	107	97	9	M3X10	20	3	10.2	190	8	200	65	50	80	M5	2.5
63	113	113	97	11	M4X10	23	4	12.5	211	9	221	65	50	80	M5	2.5
	113	113	97	11	M4X10	23	4	12.5	211	9	221	75	60	90	M5	2.5
	113	113	97	11	M4X10	23	4	12.5	211	15	221	85	70	105	M6	3
	113	113	97	11	M4X10	23	4	12.5	211	15	221	100	80	120	M6	2.5
71	136	122	97	14	M5X25	30	5	16	248	12	258	75	60	90	M5	2.5
	136	122	97	14	M5X25	30	5	16	248	12	258	85	70	105	M6	3
	136	122	97	14	M5X25	30	5	16	248	13	258	100	80	120	M6	3
	136	122	97	14	M5X25	30	5	16	248	20	258	115	95	140	M8	2.5
80	154	143	111	19	M6X16	40	6	21.5	273	12	285	85	70	105	M6	3
	154	143	111	19	M6X16	40	6	21.5	273	12	285	100	80	120	M6	3
	154	143	111	19	M6X16	40	6	21.5	273	20	285	115	95	140	M8	3.5
	154	143	111	19	M6X16	40	6	21.5	273	20	285	130	110	160	M8	3
90	174	188	111	24	M8X19	50	8	27	327	15	339	100	80	120	M6	3
	174	188	111	24	M8X19	50	8	27	327	15	339	115	95	140	M8	3
	174	188	111	24	M8X19	50	8	27	327	20	339	130	110	160	M8	3.5
100	192	159	111	28	M10X22	60	8	31	364	16	376	100	80	120	M6	3
	192	159	111	28	M10X22	60	8	31	364	16	376	130	110	160	M8	3.5
	192	159	111	28	M10X22	60	8	31	364	20	376	165	130	200	M10	4
112	216	171	111	28	M10X22	60	8	31	387	16	400	115	95	140	M8	3
	216	171	111	28	M10X22	60	8	31	387	16	400	130	110	160	M8	3.5
132	255	195	124	38	M12X28	80	10	41	495	19	508	165	130	200	M10	4
160	318	244	186	42	M16X36	110	12	45	641	24	659	215	180	250	M12	4

10. SPARE PARTS, OVERHAULS & REPAIRS

10.1 Personnel qualification

Overhauls and repairs must be carried out only by qualified people in accordance with the standard EN 60079-17 or national standards (last edition).
Qualified people must have knowledge about explosion protection.
Repairs must be made according to the rules as define in EN 60079-19 standard.
These repairs can only be done under the control or in agreement with ELPROM or by an ATEX certified workshop. In case these rules are not complied, the product will not be covered by Elprom ATEX certification anymore.

10.2 Spare parts

All motors components must be replaced with original spare parts. In these case contact ELPROM directly & provide the serial number of the motor in order to be authorized for the repair or the motor itself.

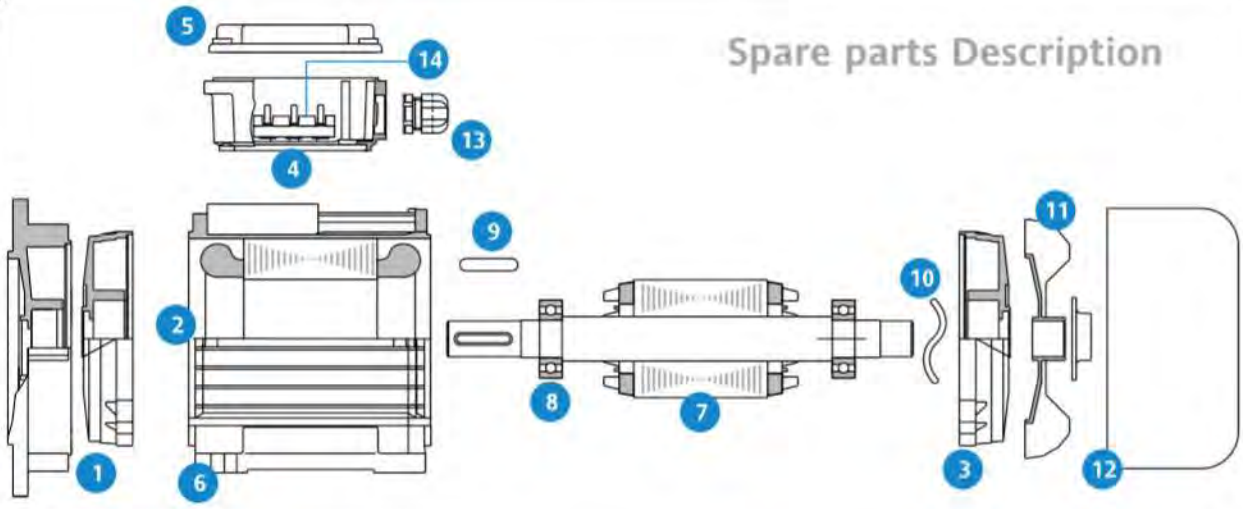

1	Drive end shield (B3) - Flange (B5)	8	Bearings
2	Frame complete with winding	9	Shaft key
3	Rear shield	10	Wave spring
4	Terminal box	11	Fan (complete of fixing collar)
5	Terminal box cover	12	Fan cover
6	Feet (removable from 63 to 355)	13	Cable gland
7	Shaft complete of rotor	14	Terminal board

ELPROM MOTORI designs & manufactures electric motors
& equipment for safe and reliable solutions

ATEX CE UL CSA CEMEP
European Committee
of Manufacturers of Electrical Machines
and Power Electronics

for further details or information, please contact:

elprom
industrial motors